NG-RIO

Radio I/O Device

[Ref. 084_ma – Rev. 03]

USER'S MANUAL

NG-RIO I/O Radio device

Requests for any specific information on the product and/or on relating options not contained in the synthetic manual, may be sent to our web site: www.energyteam.it, section "CONTACTS", sending an email to the "TECHNICAL AREA" indicating the specific request.

Energy Team reserves the right to make the modifications it deems necessary without having to give any prior notice.

Index

NG-RIO 169MHz Radio Input/output

Front view

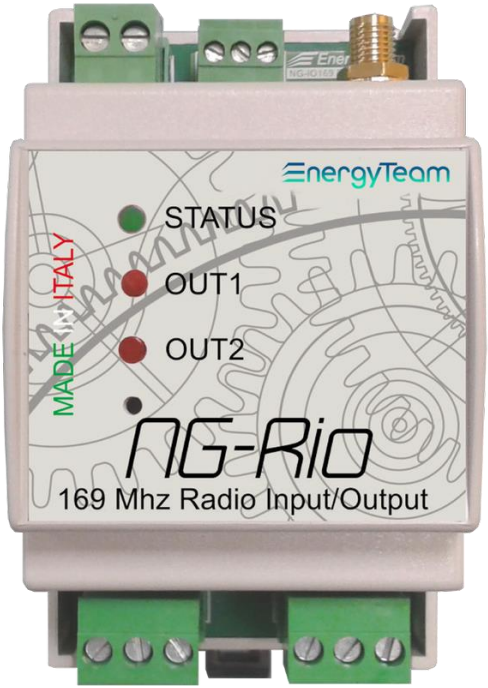

1 Introduction

NG-RIO "Next Generation Radio Input Output". It uses a radio Frequency 169 MHz to communicate with NG-W169 Radio Receiving Modules or other NG-RIO.

NG-RIO has 2 digital inputs, mainly used to read ON and OFF states from any digital Input source and that can be transmitted to NG-W169 radio receiver or to another NG-RIO based on the requirement.
It also has two interchange Relays for the Outputs, each of them has three contacts (C, NC, NO) where we can use them to switch ON and OFF a mono phase load with a maximum current of 12A.

NG-RIO can be used also as a counter for an Energy meter whose output is a digital pulse. It counts the digital inputs and sends to the NG-W169 concentrator with a configurable 1 minute dispatch period. We can access the value form the concentrator device (NG-W169) using ModBus RTU protocol. The count ranges from 0 to 999,999,999. You can also RESET or set the counter initial value operating on the ModBus Registers or locally with the jog-display of the NG-W169, if the communication between NG-RIO and the concentrator interrupts, the NG-RIO maintains the value by itself and dispatches it updated when the communication is re-established.

NG-RIO can be installed in 169MHz wireless network automatically trough a join request and covers a distance up to 1 Km.

NG-RIO is economical and extremely reliable, easier to install due to its smaller size and convenient to be used particularly for indoor installations (i.e. offices, CED, warehouses, retail centers, residential buildings, etc).

COMPLIANCE

NG-Rio complies with the following standards

- EN 61010-1:2010
- EN 62311:2008
- ETSI EN 301 489-1 V2.2.0
- ETSI EN 301 489-3 V2.1.1
- ETSI EN 300 220-1 V3.1.1
- ETSI EN 300 220-4 V1.1.1

And subsequent updates. To avoid personal injury, carry out the installation according to regulations in force and the instructions in this manual, taking into account the insulation value specified for the instrument.

⚠	Pay attention - consult the manual
🗎	Note
🗑	Waste disposal according to law
CE	CE Marking
⧈	Device in Class II (Double Insulation)
⎓	Continuous Voltage (Power Supply: 140÷340 Vdc)
~	Alternate Voltage (Power supply: 100÷240 Vac)

Energy-Team guarantees the compliance of the Short Range Device (SRD) with the functional requirements of the Electromagnetic and Radio Spectrum Compatibility guidelines (*ERC Recommendation CEPT ERC/REC 70-03*); the manufacturer will take no responsibility for all performance deficiencies or malfunctions – either partial or total – of said devices should they suffer from local radio interference traceable to emissions by other producers' devices/instruments that do not comply with said Recommendation.

GENERAL SAFETY WARNING

Failure to observe the following points can lead to serious injury or death.

According to the regulations in force concerning the safety of civil electrical systems, this product can only be installed by operators who have the requisites required by law.

- Check that the voltage supply and measurement are compatible with the range permitted by the device. Do not power on the instrument if its appearance is not intact.

- Make sure the power supply is Off before performing any inspection, visual inspection and testing on it. After stopping the power supply, make sure that the circuits are Off when tested.

- Disconnect all the power supplies prior to work on the device.

- Always use a suitable voltage detection device to check that the supply is interrupted.

- Pay attention to any dangers and carefully check the work area ensuring that no instruments or foreign objects have been left inside the compartment in which the device is housed.

- The correct use of this device depends on a correct manipulation, installation and use.

- Failure to observe the basic installation information can lead to injuries as well as damage to the electric instruments or to any other product. if the product is used in a manner not specified by the manufacturer, the anticipated safety could be compromised.

- NEVER connect an external fuse in by-pass.

- Disconnect all the Input and Output wires before carrying out a dielectric rigidity test or an insulation test on the panel in which the device is installed. The tests carried out at a high voltage can damage the device's electronic components.

- Don’t expose the module to temperature ranges outside those reported on the data-sheet. Don’t install it in sites with strong vibrations, corrosive gases, excessive dirt or high humidity. Use it only in the operating limits.

- Don’t modify the feature of the module, as: removing the covers; making holes on the case; replacing its accessories with other coming from unknown manufacturers not described on the manual’s list, because this operation may cause a malfunction and a damage of the instrument. In addition, don’t modify the layout of the internal components.

The manufacturer declines any responsibility in case of use of the instrument out of manual's specifications.

NOTE:
This manual is an integral part of the product and must therefore be kept with care.

ATTENTION!
It is strictly forbidden to install and use the device to anyone who does not possess the characteristics listed.

The device is made in compliance with the directives in force in the European Union and with the technical standards that incorporate the requirements, as evidenced by the CE mark on the device itself and in this publication.

NOTE:
For cleaning the front part of the instrument, use only a damp cloth.

NOTE:
During normal operation, the product must not be subjected to impacts of any kind.

NOTE:
For any calibration and maintenance contact the Energy Team. In case of malfunction or failure, send the device back by attaching a precise description of the fault.

NOTE:
This manual is an integral part of the product and must therefore be kept with care.

ATTENTION!
Internal use. The installation and the cabling of the device must be carried out only by qualified personnel. Danger of electrocution, burning and electric arc. Use the personal protection devices suitable to adhere to the current regulations governing electrical safety. Prior to carry out any connections check the sectioning of the electric supply with the voltage detection device.

Specifications

- NG-RIO uses radio communications to transmit measurements to NG-W169 receivers, which are equipped with RS485 RTU Modbus.
- It covers a distance up to 1 Km.
- Housing for DIN rail 46277 (3 Modules).

Technical Features

DIMENSIONS

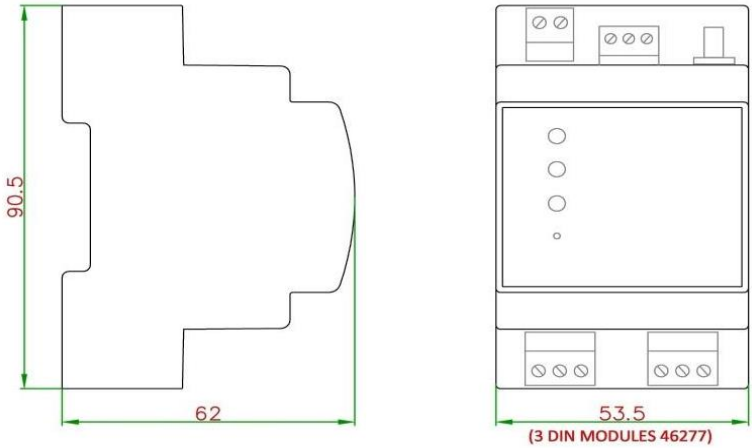

General	References
AC Power supply	100 ÷ 240 Vac 50/60Hz
DC Power supply	140 ÷ 340 Vdc
Consumption	< 0.2A @85Vac ÷ 265Vac@full load
Protection	Over Current and Over Temperature
Dimensions	3 DIN modules (approx. 54X90X60mm)
Box	PC + ABS
Weight	100 gr
Front Panel	GREEN LEDs for Operative status signal RED LEDs for output status
Working Temperature	-10°C to +65°C
Min 3 KV insulation between power supply and digital Input, Relay Output and antenna connection.	

Inputs	
Type	Clean contact – active 12Vdc insulated digital pulse. 700 ms of pulse duration. As a counter 30 Hz max and 15 ms of pulse duration.
Connection (3.5mm step)	Extractable polarized connector
Outputs	
Type	C – NC – NO Relays
Flow	250V – 12A (500mW min)
Guaranteed cycles	250,000
Control	Internal, Electronic
Protection	275V Varistors for contacts' overvoltage
Connection (5mm pace)	Extractable polarized connector
Frequency	169MHz
Power	+15 +21 +24 dBm
Antenna Connection	Female SMA

IMPORTANT NOTE:
NG-Rio must be installed inside an electrical panel on a DIN rail and only the front panel must be accessible.
Direct Current Power Supply: on the power supply Input, insert a 200mA delayed fuse, in a position NOT accessible to the operator. Furthermore, upstream, an easily accessible switch must be inserted and marked as a primary disconnection device.
Alternate Current Power Supply: install an easily accessible thermal-magneto circuit breaker of at least 240Vac, nominal current value 6A and intervention curve type C, marked as a primary disconnection device.

Interfaces and relative cable selections

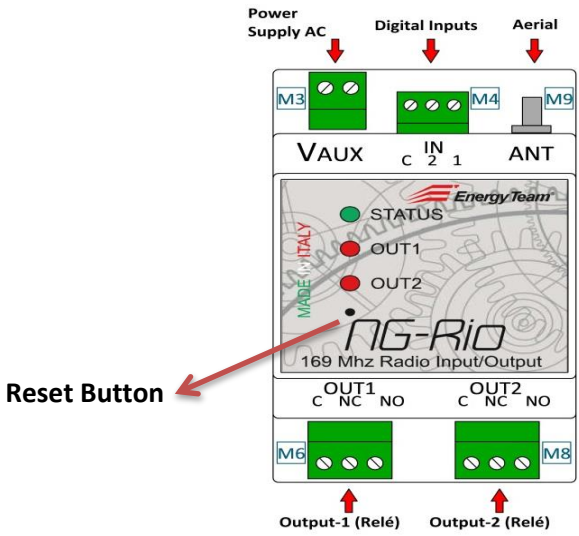

- M3: Power Supply – Maximum cable section: 2 mm^2 (16 AWG)
- M4: Digital Inputs – Maximum cable section: 0,75 mm^2 (18 AWG)
- M6 – M8: Digital Outputs Relay – Maximum cable section: 2,5 mm^2 (14 AWG)
- M9: 169 MHz interface (connection for remote antenna) SMA Female

Associative Table NG-RIO to NG-W169 Gateway

Id Type	2-Normal: state detector; 3-Counter: pulse counter; 4- Hybrid: IN_1 as state detector and IN_2 as Counter.
Measurement size	Float (32 bit) or Unsigned Integer (32 bit), 2 Modbus registers
Periodicity	1'
Alarm for lost packets	3 attempts (e.g. is Equivalent to 45')
Measurement 0	ON/OFF State of a digital Output 1 (effective value)
Measurement 1	ON/OFF State of a digital Output 2 (effective value)
Measurement 2	ON/OFF State of a digital Input 1 (desired value)
Measurement 3	ON/OFF State of a digital Input 2 (desired value)
Measurement 4	Radio operation Status of a digital Output 1
Measurement 5	Radio operation Status of a digital Output 2
Measurement 6	ON/OFF State of a digital Input 1 (master)
Measurement 7	ON/OFF State of a digital Input 2 (master)
Measurement 8	Counter of OFF/ON transition (or pulse) on digital Input 1
Measurement 9	Counter of OFF/ON transition (or pulse) on digital Input 2
Measurement 10	Average of OFF/ON transition (or pulse) on digital Input 1 from previous reception. [N° of pulse/h]
Measurement 11	Average of OFF/ON transition (or pulse) on digital Input 2 from previous reception. [N° of pulse/h]

In order to map the Modbus Registers, refer to MODBUS REGISTER MAPPING in the NG-RIO manual, the section about sensor installing.

Device Functions

For each radio communication is composed of a starting message and a response (ACK). Each response message shows the current contents of inputs and outputs. Below is the description of the four main types of device communication:

1. *Variation of the digital Inputs*

Whenever there is a variation of the digital inputs there will be an immediate transmission of the inputs state to the remote module, which can be a gateway or another NG-RIO.
This process will be repeated for 1 time within 5 seconds if the response is not received from the remote module.

2. *Keep Alive*

Every 1' the NG-RIO that has required a join sends a message to communicate its presence in the RF network.

This process will be repeated for 1 time within 32 seconds if the response is not received from the remote module.

Each time the NG-RIO switches on, it sends the first keep alive message. If the NG-W169 receiver checks that the user-set output values are different from that received by the NG-RIO, a communication from NG-W169 to NG-RIO is immediately sent to align its outputs.

(Only for ID Type 3 NG-Rio Counter and ID Type 4 NG-Rio State & Counter)

Whenever there is a pulse recognized on the digital inputs the local counter Will be updated.

NG-RIO is waiting for every radio communication (1' period) ACK from the receiver in this case NG-W169. For each data transmission when an ACK is received, the count update is subtracted by subtracting the reported pulse value. Until an ACK is received, the accumulation continues on a regular basis.

This process will be repeated for 1 time within 32 seconds if the response is not received from the remote module.

3. <u>Set Output</u>

When 2 NG-RIO are joined each other, the variation of Input-1 of NG-RIO (A) causes the change of Output-1 of NG-RIO (B). Likewise Intput-2 of NG-RIO (A) will control Output-2 of NG-RIO (B).

When the communication is between NG-RIO and NG-W169, we can control the status of NG-RIO output remotely from NG-W169 by accepting a command via RS-485 Modbus communication. After sending the command via Modbus, you can check the status of the radio transaction by reading the "Measure 4" and "Measure 5" registers -Output n operation state: '0' Executed, '1' Queue, '2' Retry, '4' Failed. NG-W169 ignores new command if the status of this registers is '1' or '2'.

4. *Device Recovery*

This procedure will cancel the join with another module and causes the device restart.

- First, press and hold the Reset Button.
- Always, by holding the Reset Button pressed, switch ON the NG-RIO device. All the LEDs blink for 5 seconds. Then, only the LED "OUT 1" lights ON.
- Release the Reset Button. Also LED "OUT 2" lights ON and the reset sequence occurs.

5. *Hot Device Configuration*

when NG-RIO is working regularly, press and hold the Reset Button under the front panel until the 'OUT2' LED switch ON (5") and 'OUT1' and 'STATUS' LEDs switch OFF, then release and the configuration sequence occur. Thus, the irradiated power is configured according to the table at the chapter How to enable it on NG-RIO Device.

6. *How to Interpret the LED status*

No.	State	Description
1	'STATUS', 'OUT1', 'OUT2' LEDs blinks fast for 3''	Wait for Device Recovery
2	'STATUS' OFF 'OUT1', 'OUT2' LEDs blinks slowly for 5''	Wait for Coverage Test
3	'STATUS' LED blinks slowly & 'OUT1', 'OUT2' LEDs OFF	Wait Join request for Establishing Communication with another NG-RIO
4	'STATUS' LED, 'OUT1', 'OUT2' LEDs blinks slowly	Send Join Request
5	'STATUS' LED ON & 'OUT1', 'OUT2' LEDs OFF	Joined & Stable
6	'STATUS' LED ON & 'OUT1' &/or 'OUT2' LEDs ON	Joined, Stable & Corresponding output is ON
7	'STATUS' & 'OUT1' LEDs OFF, 'OUT2' LED blink very fast & OFF.	The number of very fast / OFF cycles corresponds to the module number + 1 on the NG-W169 receiver.

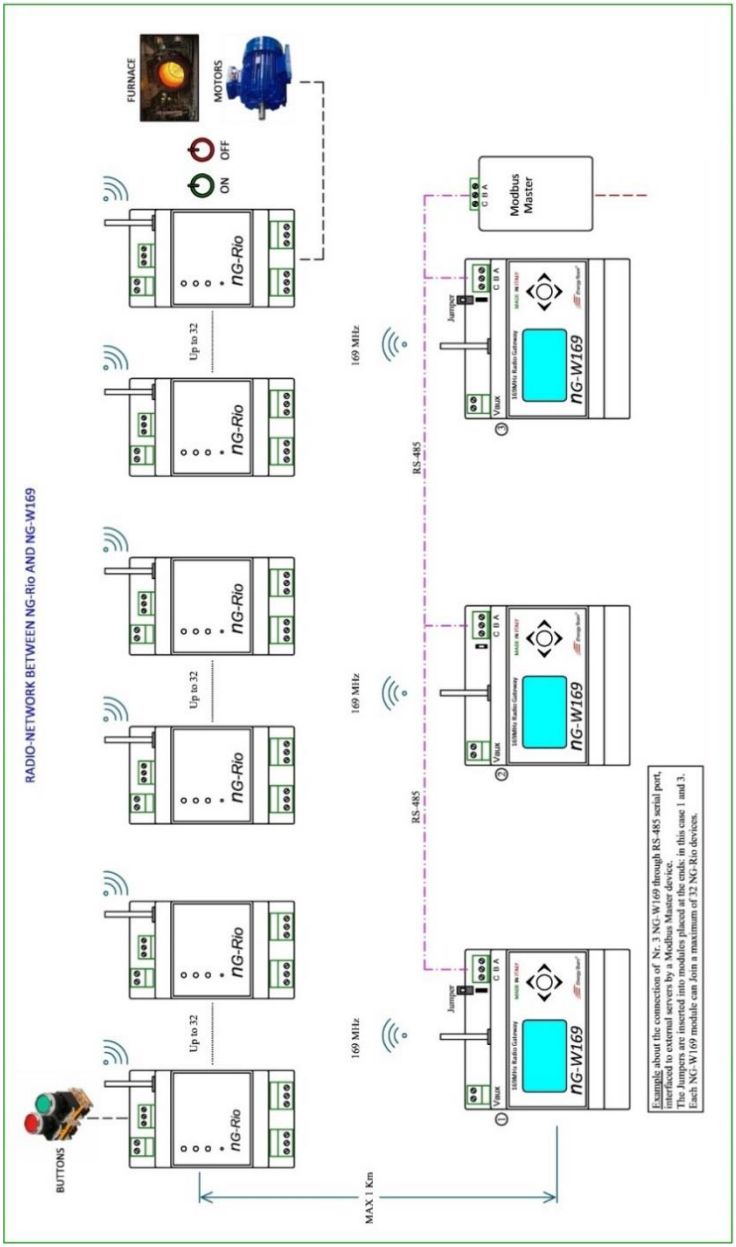
RADIO-NETWORK BETWEEN NG-Rio AND NG-W169
BUTTONS
nG-Rio
Up to 32
nG-Rio
Up to 32
nG-Rio
Up to 32
nG-Rio
ON
OFF
FURNACE
MOTORS
169 MHz
169 MHz
169 MHz
RS-485
RS-485
Jumper
Jumper
nG-W169
nG-W169
nG-W169
Modbus Master
MAX 1 Km
Example about the connection of Nr. 3 NG-W169 through RS-485 serial port, interfaced to external servers by a Modbus Master device.
The Jumpers are inserted into modules placed at the ends: in this case 1 and 3.
Each NG-W169 module can Join a maximum of 32 NG-Rio devices.

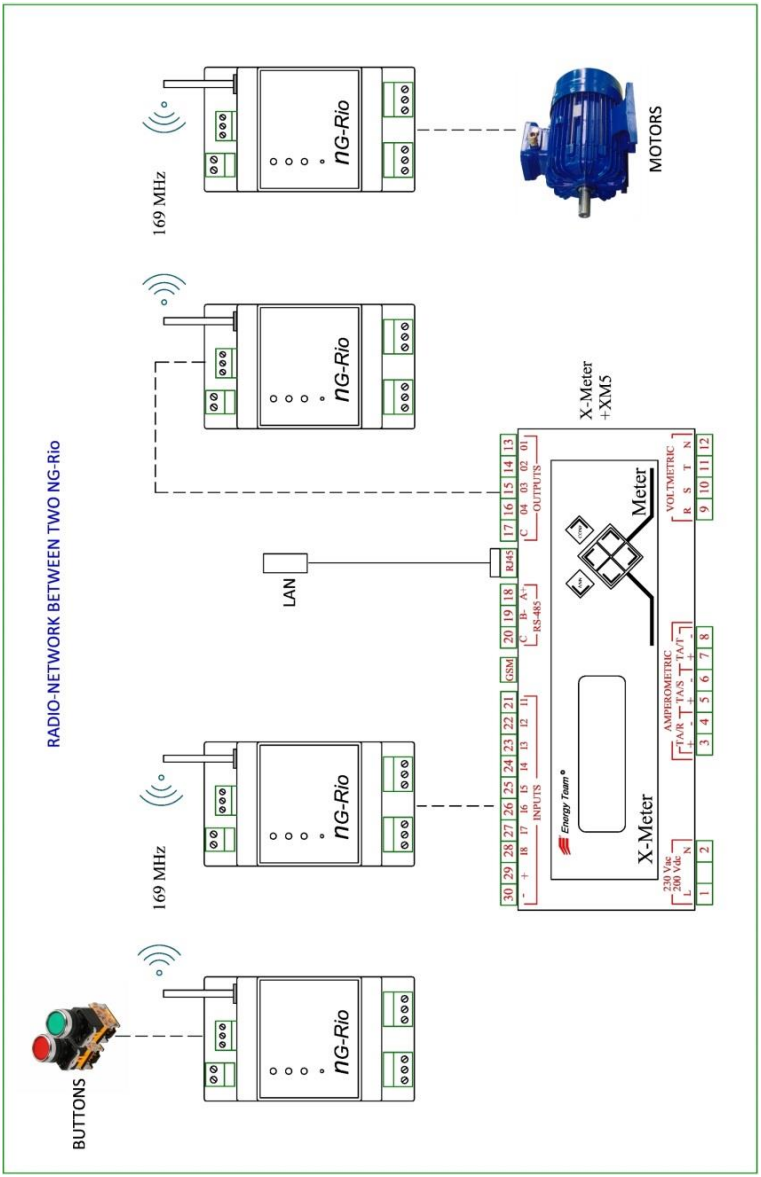
RADIO-NETWORK BETWEEN TWO NG-Rio
BUTTONS
169 MHz
nG-Rio
169 MHz
nG-Rio
nG-Rio
nG-Rio
MOTORS
LAN
X-Meter
+XM5
X-Meter
Meter
Energy Team
INPUTS
OUTPUTS
RS-485
RJ45
GSM
AMPEROMETRIC
VOLTMETRIC
230 Vac
260 Vdc

GENERAL S/ REGULATIONS

• NG-Rio device must be used by specialized and qualified personnel only.

• Remove all types of power supply and connection to the terminals of the device before opening the container. Attention: device powered to 240Vac and 340Vdc power supplies.

• Do not use it in presence of water.

• Strictly comply with the indications and diagrams in this manual when connecting the device.

• Any use, intervention or tampering not expressly specified by the manufacturer is absolutely prohibited. This, in any case, determines the compromise of the product functions and the immediate forfeiture of its warranty.

WARRANTY

Energy Team guarantees that the supplied products are free from defects and suitable for use. If any malfunction occurs and these are due to manufacturing defects, E.T. will respond within the terms and modalities foreseen by General Conditions of Supply, with particular reference to articles 5B (terms and duration), 1C (limits), 5D (other warranties). Whatever operation or manumission made by third parties not expressly authorized determines in each case the immediate termination of the warranty.

DISPOSAL

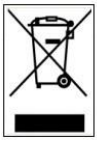

WASTE OF ELECTRICAL AND ELECTRONIC EQUIPMENT (WEEE)
Don't dispose among generic waste but collect separately for recycling and disposal operations according by law.

NOTE: If you have any doubts about the installation procedure or the use of the product, contact the technical assistance or the local distributor.

2 Installation sequence NG-RIO

In this section, we describe the schematic sequence of the steps to carry out system setup for 4 types of connections, i.e: (IN_1 and IN_2 as state detector) NG-RIO with NG-W169; (IN_1 and IN_2 as counter) NG-RIO with NG-W169; hybrid version (where IN1 works as a state detector and IN2 works as a pulse counter) NG-RIO with NG-W169; NG-RIO with NG-RIO.

Before Powering ON and starting the connection, please open the front cover of the device and place the Jumpers into proper positions as shown in the following figure:

OPT0	OPT1	OPT2	OPT3	OPT4	OPT5	OPT6	FUNCTION	
							(IN_1 STATE - IN_2 STATE) NG-RIO / NG-W169	MODE
					■		NG-RIO / NG-RIO	
						■	(IN_1 STATE - IN_2 COUNTER) NG-RIO / NG-W169	
					■	■	(IN_1 COUNTER - IN_2 COUNTER) NG-RIO / NG-W169	

■	JUMPER Closed
	JUMPER Opened

- The installation sequence leads the user to set the receiver in join mode, then end the Join procedure by acting on the sensor.

- After joining all devices, it's useful to check the RF signal range, therefore install the receiver in the final position and check if the position for the device allows a correct radio coverage. By using the RSSI values test (see table in the Chapter 3 RSSI Values) it's possible to read directly on the sensor display the input signal power value on the module.

- Then, it's possible to check the devices state by reading them from the receiver NG-W169 by using RS485 Modbus Protocol. For using the Modbus register mapping, refer to Chapter 4.

- After these steps, if the receiver is switched ON for a long time, waiting the final installation, it's recommended to switch off the NG-RIO by following the procedure on the manual.

2.1 Network with NG-RIO and NG-W169

2.1.1 Join menu selection on the Gateway

- Turn ON the NG-Rio, all the LEDs flash for 5 seconds, then they remain in ON for about 3 seconds.

- After, from LED 1 (STATUS), in sequence, each LED flashes a number of times equal to the digit which makes the number of Firmware version, each separated by a dot.

For Example: *If the Firmware version is 1.3.5, first the LED "STATUS" flashes 1 time, then the LED "OUT 1" flashes 3 times, then then the LED "OUT 2" flashes 5 times.*

- Then, all the LEDs flash slowly, looking for a Join (if the device was reset). If the Jog fails, the LEDs flash faster for an indefinite time.

First turn ON the NG-W169 Gateway, you will see a welcome page automatically replaced with Measurements & Output page.

Go down using the Jog button. When you reach the System Setup menu Jog to the right and then press Jog (Enter). When inserting the PIN (0000), the first screen displayed is the following:

This screen is also displayed when the Join sequence is successfully concluded. Then, press Jog (ENTER), two screens (modalities) may be displayed:

i. <u>The First Modality</u>

This screen shows the flashing indication "Wait for join"

- If the instrument is turned ON when it's in the first default mode; or
- If the results produced by eventual cancellation sequences are exhausted; or
- when the "Compacting Modules" operation was carried out.

At this stage:

- Turn NG-RIO 'ON' and wait until the start-up sequence is completed.
- When it is joined, this screen will be displayed on NG-W169 Gateway, it disappears when the JOG button is pressed.

- Finally, the STATUS LED on NG-RIO will be stably 'ON' when the first data transmission takes place.

ii. The Second Modality

If the sequence of Delete module or if Delete Last module were carried out, a submenu is shown; from which it's possible to select two functions by Clicking UP or DOWN:

i. First function

Click Jog (ENTER) to insert automatically the first free sensor position. This screen is displayed:

ii. Second function

Press Jog (ENTER) to insert the sensor into last position cleared. This screen is displayed:

When you see 'Wait-for-Join':

- Turn NG-RIO 'ON' and you can see JOIN on the NG-W169.
- The STATUS LED on NG-RIO will be stably 'ON' when the first data transmission takes place.

2.1.2 If the join procedure Fails:

On NG-RIO all LEDs blink fast waiting for a recovery procedure or a new device start-up, while on NG-W169 Gateway the display continues to show the "Waiting for join" menu.

MEASUREMENT

When NG-RIO has established the connection (Join), you can manage the output states of the Relays 1 and 2, on the NG-RIO connected.

NG-RIO can be used as a counter by integrating it with a fiscal counter with a pulse output. Otherwise, it's possible to use it as a state detector. In these two modalities, by connecting it to NG-W169 concentrator, you can see on the display respectively the number of pulses counted or the state variation from OFF to ON, directly in Measurements and Outputs section.

NOTE: For the instructions about NG-W169 menu consultation, refer to respective manual.

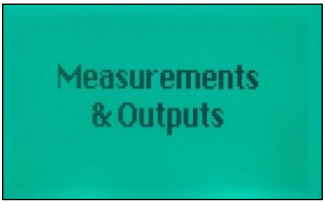

Measure 4 and Measure 5 shows the last value of count received by NG-RIO, respectively for Input 1 and Input 2:

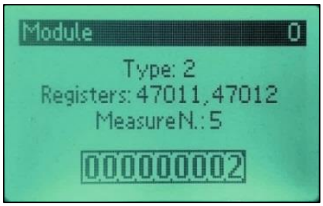

To cancel the count value, go to System Setup menu by means of the Jog button. In this menu, click Jog to Right position and then press it (equivalent to Enter). When inserted the PIN (0000) code, scroll down the pages until to display the following:

Press Jog (Enter) to display the Reset Counter page, it shows a flashing cursor on the indications Module and Measure. Press again Jog to confirm the cancellation of the desired counter.

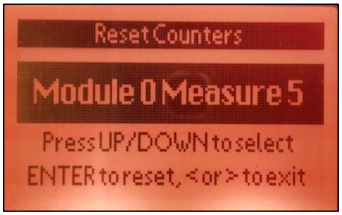

You can connect an NG-Gateway where you can get the counter values and interpret them with the correct unit. These values can be visualized by the user easily.

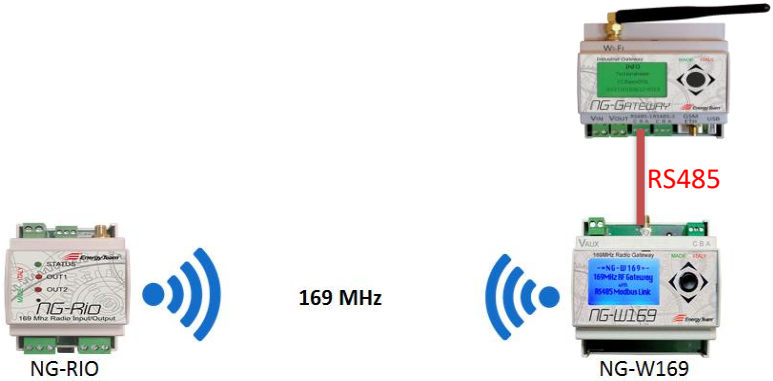

NOTE: The main thing you need to take care is the position of jumpers in NG-RIO, which should be as shown in Chapter 2. (Installation sequence NG-Rio)

2.2 Network With 2 NG-RIOs

Before you start, make sure the jumper configuration of NG-RIO is correct.

Keep NG-RIO B switched 'OFF' and turn 'ON' NG-RIO A

- Wait until it finishes the start-up sequence i.e. 'STATUS', 'OUT1', 'OUT2' LEDs blink fast for 3".
- Wait until it completes the second phase i.e. the LEDs 'STATUS', 'OUT1' and 'OUT2' slowly flash for 5".
- On third phase LEDs 'STATUS' slowly flashes while 'OUT1' and 'OUT2' are OFF.
- This phase keeps until the first send take place (the time interval of this phase is random between different devices and is repeated for 3 times if no answer is reached by the NG-W169 or a 2nd NG-RIO). On this stage switch 'ON' NG-RIO B.

After completing the above steps, a communication between NG-RIO A and NG-RIO B will be established and the 'STATUS' LED stays ON.

After joining the devices you are ready to use them. You can control Output Relay 1 of NG-RIO B by Input 1 of NG-RIO A, Output Relay 2 of NG-RIO B by Input 2 of NG-RIO A, and Vice Versa.

2.2.1 If the join procedure Fails:

- NG-RIO A: if no request reaches the device within 30" then all LEDs blink fast waiting a recovery procedure or a new device start-up.
- NG-RIO B: if no response is received within 5", then for 30" STATUS LEDs flash slowly then all LEDs blink fast waiting a recovery procedure or a new device start-up.

2.3 NG-W169 Gateway position, for correct RF coverage

For a correct propagation of the radio signal, follow the rules mentioned below. The presence of obstacles may cause a change in the antenna's nominal performance.

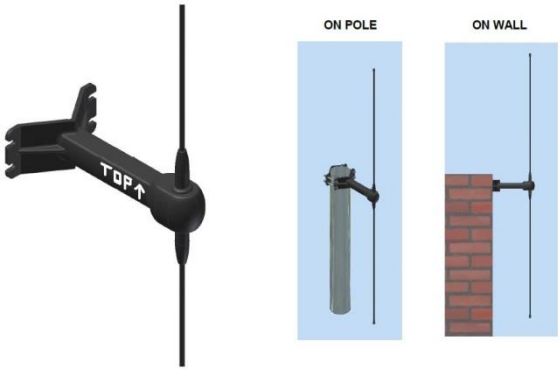

Dipole antenna MOUNTING INSTRUCTIONS

<u>IMPORTANT NOTE</u>:
As shown in the picture, locate the indication "TOP" with the arrow pointing upwards, for the correct direction of antenna installation.

Wall mounting: please use the dedicated seats for screws and Fischer plugs for Ø 5 mm holes.

Pole mounting: please use the provided dedicated bracket for a for a pole of Ø from min. 40 mm (1.1/4 inch) to max. 60 mm (2 inch)

Avoid to position the antenna:

1. Inside metal containers.
2. Away from obstacles interfering with radio wave propagation.

CAUTION: An improper installation degrades the radio signal and may decrease the standard lifetime battery.

3 RSSI Values

On the front panel of NG-RIO It is possible to see the RSSI (Receive Signal Strength Indicator) value of Input Power detected during the communication between the device NG-RIO and NG-W169 by converting the indications of the LEDs according to the table:

NOTE: *This test can be performed only after the NG-W169 Gateway and NG-RIO Joined. The same applies to a network with two 2 NG-Rio.*

HOW TO INTERPRET IT

		RSSI	
		dBm	Quality
●	———	-40	Good
	– – –	-50	
●	———	-60	Accettable
	– – –	-70	
●	———	-80	Poor
	– – –	-90	
	OFF	lower -90	

- During the test, the communication will be every 2 seconds.
- Every signal sent will reversed the state of the outputs allowing the clicking sound of relays.
- If all LEDs at the same time blink very fast, it means the absence of a signal so try to increase the RF output power.

Start the test with the devices near to each other.

3.1 Network with NG-Rio and NG-W169

How to enable it on NG-W169 Gateway:

To choose the RF output power of NG-W169, when you reach the System Setup menu jog to the right and click enter. Input the PIN (0000) and scroll down to Power RF Output Menu and choose the appropriate Value (+15 dBm in this example).

How to enable it on NG-RIO Device:

Choose the desired RF output power, before Powering ON and starting the test please open the front cover of the device and place the Jumpers into proper positions as shown in the following figure.

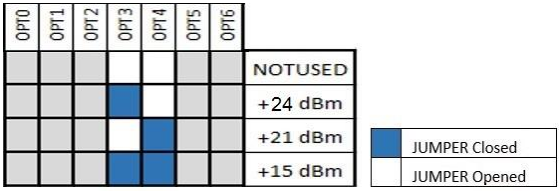

Switch ON the device and wait until it finish the start-up sequence "STATUS'',''OUT1'' and ''OUT2" LEDs will blink fast for 3"
If the test fails Stop the test and restart NG-RIO: press and hold the reset button under the front panel until the ''OUT2'' LED switch ON and STATUS and ''OUT1'' LED switch OFF, then release and the reset sequence occur.

NOTE: Make use of the enclosed Table at the paragraph 3.3 to annotate: Number of the sensor module for which the test was carried out; the RSSI value read; the indicator of the position at which the device was installed.

3.2 Network with 2 NG-RIOs

Choose the desired RF output power, before Powering ON and starting the test please open the front cover of the device and place the Jumpers into proper positions as shown in the following figure.

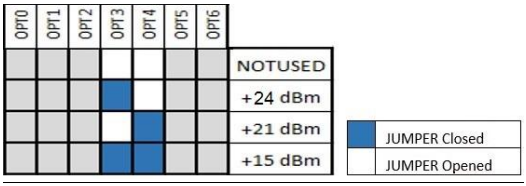

Switch ON the 2 devices and wait until status LEDs is stable

Restart one of the 2 devices (This device starts the test and displays the results) and wait until the finish the start-up sequence "STATUS'', ''OUT1'', ''OUT2" LEDs blink fast for 3 seconds.

Then within the 2nd sequence which lasts for 5 seconds ''STATUS'' LED is OFF, ''OUT1'' and ''OUT2'' LEDs blink slow to indicate a waiting time; press the reset button under the front panel until the ''STATUS'' LEDs switch ON.

The device begins the Test, by sending a signal every 2 seconds.

On the 2nd device to any communication received correctly it reverses the status of the output 1 allowing the clicking sound of relays.

If the test fails, Stop the NG-RIO that started the test, press and hold the button under the front panel until the ''OUT2'' LED switch ON, while status and ''OUT1'' LED switch OFF. Then release and the reset sequence occur.

NOTE: Make use of the following enclosed Table to annotate: Number of the sensor module for which the test was carried out; the RSSI value read; the indicator of the position at which the device was installed

3.3 Signal Power vs Position Table

Insert here the Gateway Name			
N° Device	RSSI [dBm]	Place	Note

4 NG-W169 MODBUS REGISTERS MAPPING

4.1 Writing / Reading the Modbus Registers

Supported Functions: 03 - read holding registers; 06 - write single register; 16 - write multiple registers.

The "floating point" measures at 32 bit (4 bytes) and 32 bit "full", use together two consecutive Modbus registers; therefore it's necessary to read at the same time two Modbus registers, in order to read the value of a measurement.

The reading in this interval of an odd number of registers or an odd initial register will generate a response with error code ILLEGAL ADDRESS.

For the write operation of the registers, it is supported the function 16 (write multiple registers).

The "ID" registers shown on the table are equivalent to DATA ADDRESS, 7000 corresponds to Holding Register 47001.

4.2 Registers map

The table on the next page shows all the registers map, with ID Register; Format; Contents.

Configurations			
ID	Format	Contents	Note
1122	U16 RW	RF output power 0= +15 dBm 1= +21 dBm 2= +27 dBm	
1123	U16 RW	Modbus Address from 1 to 247 Default value: 1	2,3
1124	U16 RW	Serial line speed 0= 9600 bps 1= 19200 bps 2= 38400 bps 3= 57600 bps 4= 115200 bps	2,3
1125	U16 RW	RS485 Serial line Parity 0= none 1= even 2= odd	2,3
1126	U16 RW	Stop bit serial line 0= 1 stop bit	2,3

		1= 2 stop bit	
1127	U16 RW	Protection PIN against accidental writing 1..65535 settable value Default value: 0	2
1128	U16 RW	RF W-MBUS Channel 0..6 settable value Default value: 2	2
1344	CHAR[2] RO	Serial number, character 1 and 2 LSB character is on the left	5
1345	CHAR[2] RO	Serial number, character 3 and 4	5
1346	CHAR[2] RO	Serial number, character 5 and 6	5
1347	CHAR[2] RO	Serial number, character 7 and 8	5
1348	CHAR[2] RO	Serial number, character 9 and 10	5
1349	CHAR[2] RO	Serial number, character 11 and 12	5
1350	CHAR[2] RO	Serial number, character 13 and 14	5
1351	CHAR[2] RO	Serial number, character 15 and 16	5
1352	U16 R	FW (hex) Revision	

Special Registers, set only through WRITE SINGLE REGISTER (F06)			
ID	Formato	Contenuto	Note
0999	U16 WO	PIN protection setup (0000-9999) Initial value 0000	4
9735	U16 WO	Special registers enable Value 4202 Write (it answers “Success” also if wrong)	5
9739	U16 WO	Remote restart	2
9740	U16 WO	Clear PIN	5

4.3 Structure of the sensors

This structure gives the necessary information to interpret how many and which sensors were joined on the gateway (N from 0 to 31).
They are shared in 4 areas:

1. Sensor Indexing Table
2. Measurements Table, reached by the "indexing table".
3. RSSI measurements Table, valid for the sensors active in the receiver
4. Status Table, valid for the sensors active in the receiver.

The Joined sensor modules are normally added with sequential numbering (the first joined is 0, the second 1, etc).

4.4 Table for Sensors indexing

The index table is organized in blocks of five registers, one block for each possible joinable sensor module on the gateway.

The first location of each block (register 5000 + N * 5), has this meaning:

- equal to 0: No sensor module joined; it is possible to stop the scanning of the index table.
- different from 0; The sensor module is present and is identified by "ID TYPE" code read (see the sensor specific manual for codification); it's necessary to continue the reading of the locations in the entire block, in order to interpret the information for the joined sensor. See the following table.
- It is 0xFFFF: Data of a valid sensor module aren't present (deleted module); then, ignore the current block and proceed to the next one.

The second and third location of each block (register 5001 and 2002 + N * 5), contains the unique ID Serial Number of the joined sensor.

The fourth location of each block (register 5003 + N * 5), contains the bits field of the 16 possible measure of a sensor; where the LSB corresponds to the first measure of the sensor.

The fifth location of each block (register 5004 + N*5), contains the 1st Measurement Register; Start of measurement registers; all the next measure register are stored in sequence

16 bit Sensor descriptor			
ID	Format	Content	Note
Sensor 0			
5000	U16 RO	ID TYPE	7
5001	U16 RO	4 Byte ID Serial Number 1	
5002	U16 RO	4 Byte ID Serial Number 2	
5003	U16 RO	Active Measurement	6
5004	U16 RO	1° Measurement Register addr; set 7000 as offeset; Begin measurement registers.	
Sensor 1			
5005	U16 RO	ID TYPE	7
5006	U16 RO	4 Byte ID Serial Number 1	
5007	U16 RO	4 Byte ID Serial Number 2	
5008	U16 RO	Active Measurement Sensor 1	6
5009	U16 RO	1° Measurement Register addr; set 7000 as offeset; Begin measurement registers.	
Sensor N			
5000+N*5	U16 RO	ID TYPE	7
5000+N*6	U16 RO	4 Byte ID Serial Number 1	
5000+N*7	U16 RO	4 Byte ID Serial Number 2	
5000+N*8	U16 RO	Active Measurement Sensor N	6
5000+N*9	U16 RO	1° Measurement Register addr; set 7000 as offeset; Begin measurement registers.	
Sensor 31			
5155	U16 RO	ID TYPE	7
5156	U16 RO	4 Byte ID Serial Number 1	
5157	U16 RO	4 Byte ID Serial Number 2	
5158	U16 RO	Active Measurement Sensor 1	6
5159	U16 RO	1° Measurement Register addr; set 7000 as offeset; Begin measurement registers.	

32 bit Sensors instant Measures (depending by the joined sensor) *Example of Measures register with two NG-Rio devices joined with NG-W169 gateway.*			
ID	Format	Content	Note
7000	U32 RO	Module 0 Measure 0 = Output 1 (effective value)	
7002	U32 RO	Module 0 Measure 1 = Output 2 (effective value)	
7004	U32 RW	Module 0 Measure 2 = Output 1 (desired value)	2
7006	U32 RW	Module 0 Measure 3 = Output 2 (desired value)	2

32 bit Sensors instant Measures (depending by the joined sensor) *Example of Measures register with two NG-Rio devices joined with NG-W169 gateway.*			
ID	Format	Content	Note
7008	U32 RO	Module 0 Measure 4 = Output 1 (operation state); '1' queue, '2' retry, '4' failed.	
7010	U32 RO	Module 0 Measure 5 = Output 2 (operation state); '1' queue, '2' retry, '4' failed.	
7012	U32 RO	Module 0 Measure 6 = Input 1	
7014	U32 RO	Module 0 Measure 7 = Input 2	
7016	U32 RW	Module 0 Measure 8 = Input 1 OFF/ON (open/closed) state transition or pulse.	2
7018	U32 RW	Module 0 Measure 9 = Input 2 OFF/ON (open/closed) state transition or pulse.	2
7020	FP32 RO	Module 0 Measure 10 = Input 1 OFF/ON average transition (or pulse) from previous reception.	[N° of pulse/h]
7022	FP32 RO	Module 0 Measure 11 = Input 2 OFF/ON average transition (or pulse) from previous reception.	[N° of pulse/h]
Additional N Sensors (N from 0 to 31)			
7000+N*24	U32 RO	Module N Measure 0 = Output 1 (effective value)	
7000+N*24+2	U32 RO	Module N Measure 1 = Output 2 (effective value)	
7000+N*24+4	U32 RW	Module N Measure 2 = Output 1 (desired value)	2
7000+N*24+6	U32 RW	Module N Measure 3 = Output 2 (desired value)	2
7000+N*24+8	U32 RO	Module N Measure 4 = Output 1 RF operation state; '1' queue, '2' retry, '4' failed.	
7000+N*24+10	U32 RO	Module N Measure 5 = Output 2 RF operation state; '1' queue, '2' retry, '4' failed.	
7000+N*24+12	U32 RO	Module N Measure 6 = Input 1	
7000+N*24+14	U32 RO	Module N Measure 7 = Input 2	
7000+N*24+16	U32 RW	Module N Measure 8 = Input 1 OFF/ON (open/closed) state transition (or pulse).	2
7000+N*24+18	U32 RW	Module N Measure 9 = Input 2 OFF/ON (open/closed) state transition (or pulse).	2
7000+N*24+20	FP32 RO	Module N Measure 10 = Input 1 OFF/ON transition (or pulse) from previous reception.	[N° of pulse/h]
7000+N*24+22	FP32 RO	Module N Measure 11 = Input 2 OFF/ON transition (or pulse) from previous reception.	[N° of pulse/h]

16 bit RSSI Measures			
ID	Format	Content	Note
6000	S16 RO	Module 0: RSSI value	dBm
6001	S16 RO	Module 1: RSSI value	dBm
……			
Additional N Sensors (N from 0 to 31)			
6000+N	S16 RO	Module N: RSSI value	dBm

16 bit Sensors Status			
ID	Format	Content	Note

6500	U16 RO	Module 0
		bit 0 = 1 RF Link Lost (over 45' with no signal)
		bit 1 = 1 not used
		bit 2 = 1 Sensor Fault;
		bit 3 = 1 RF Module Anomaly;
		0x00 all FINE	

6506	U16 RO	Module 1	
……			
Additional N Sensors (N from 0 to 31)			
6500+N*6	U16 RO	Module N	

Note:

1. The registers of the calendar must be read or written simultaneously.
2. Writing is protected if the PIN register (1127) is set to a value different from zero; in this case, before writing into the protected records, you must write the PIN value into the 999 register with the function 06, write single register.
The PIN register cannot be read twice, once read, it goes back to zero.
3. After modifying the registers, it is necessary to restart the instrument (see register 9739).
4. See point 2.
5. Writing allowed only after Special PIN writing in 9735.
6. In N° OF ACTIVE MEASURES ON N SENSOR, the 16 bit represent the 16 available measures: if the corresponding bit is 1, the measure is active while, if it's 0, the measure is inactive.
7. Users and interrogation Software both must know the Measures Registers available see the specific manual sensors. Any attempt at writing a reading only register would give back 07 Error.

Data Format

32 BIT FLOAT

The lower register contains the most significant part of the float number.

Format for Float IEEE number:

B3	B2	B1	B0
SEEEEEEE	EMMMMMMM	MMMMMMMM	MMMMMMMM

Encoding of Modbus registers:

Register A		Register A+1	
B3 (MSB)	B2	B1	B0 (LSB)

Example
The number 5000.0 is encoded into single-precision IEEE format as: 459C4000H

B3	B2	B1	B0
45H	9CH	40H	00H

The encoding in Modbus registers will then be

Register A		Register A+1	
45H	9CH	40H	00H
459CH (17820 decimal)		4000H (16384 decimal)	

INTEGER 32 BIT WITHOUT SIGN

Integer 32 bit number

12345678H will be encoded in the Modbus registers as follows:

Register A		Register A+1	
12 (MSB)	34	56	78 (LSB)

Energy Team S.p.A.
Via della Repubblica, 9, 20090 Trezzano sul Naviglio (MI)
P +39 02 40405033 – F. +39 02 48405035 - E info@energyteam.it - PEC pec@pec.energyteam.it - W www.energyteam.it